GE Intelligent Platforms

High Performance Embedded Computing (HPEC)

imagination at work

From Here

- Bringing technology from Supercomputing to rugged MilAero applications
  - Mainstream processors and interconnects
- Open Standards Architectures
  - Hardware
  - Software
- Dense High Performance Embedded Computing platforms
  - Lowest SWaP

To Here

Typical Supercomputer

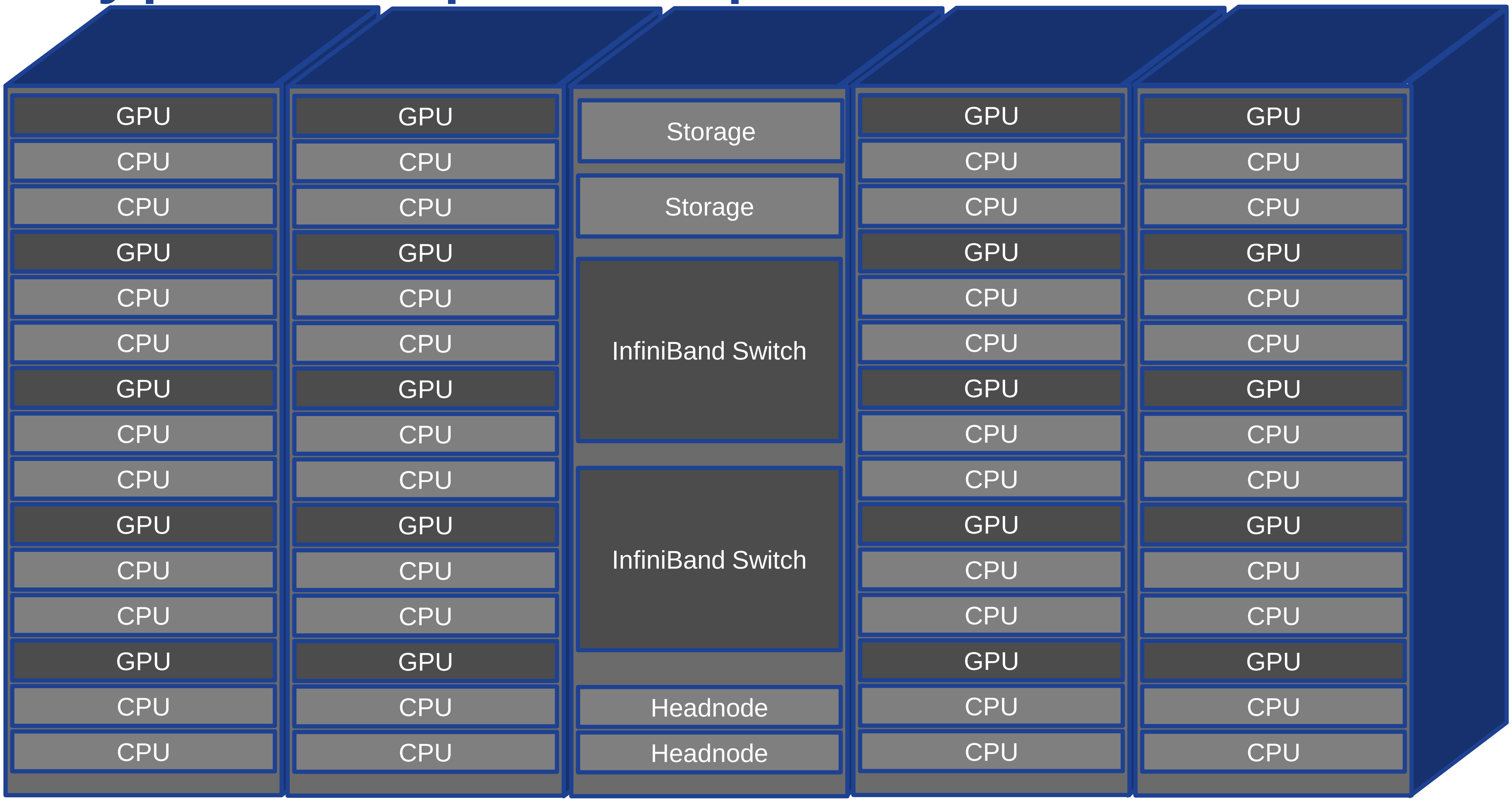

42% of the world’s most powerful computers use InfiniBand and OFED
3 of the top 5 use GPGPU

imagination at work

Embedded Supercomputers

The same architectures, but designed for deployment in harsh environments

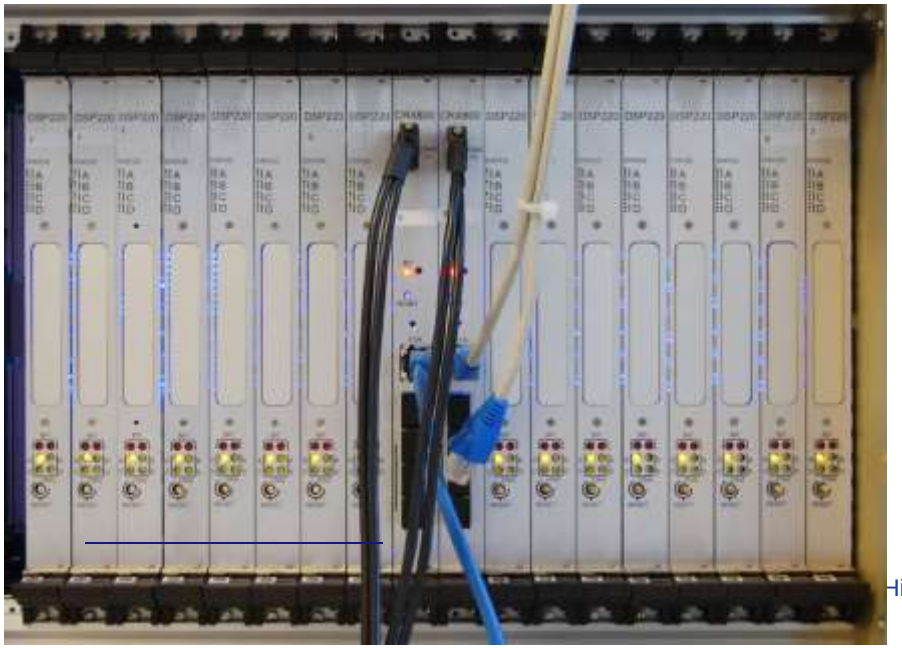

Shock,
Vibration,
Temperature extremes,
Long lifecycles

imagination at work

HPEC Center of Excellence (CoE) capabilities

Provide solutions based pre-sales customer engagement via HPEC capture team:

- System architecture definition.
- System performance studies & benchmarking.
- Application orientated system demos.

Develop 'application-ready' development systems:

- Develop integrated, pre-configured HPEC lab systems.
- Linux & middleware pre-installed, out-of-the-box examples & demos.
- Feed requirements into Systems team in Huntsville for volume production.

Provide post sales application support and professional services:

- On-site 'getting started' support & training.
- Application development support & services (custom algos etc).

GE supports HPEC from desktop to deployment

1
Desk Top PC or Blade Servers

2
HPEC Application Ready Platform MOSA

3
Deployed Production Platforms

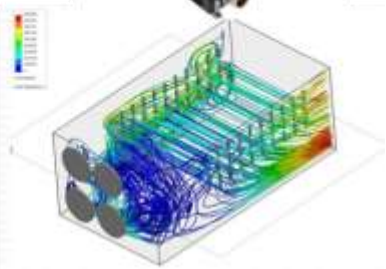

HPC
Benign

Deployable HPEC OpenVPX
Extended Temp. Full rugged boards & systems

Radar processing

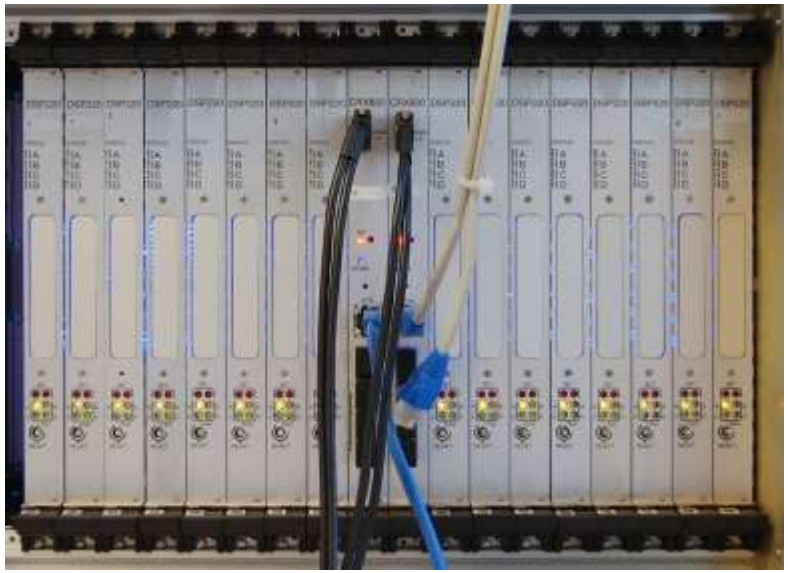

Typical older system:

4 cu ft., 105 lbs., 2000W

576 GFLOPS peak

(18 x quad PPCs, 6U VXS)

New system:

0.8 cu ft., 10 lbs., 120W

770 GFLOPS peak

SBC325 + GRA112

(Intel 3rd Gen i7 + Kepler GPGPU, 3U VPX)

imagination at work

The Enabling Technologies

imagination at work

Modular Open System Architecture

- *Modular OpenVPX platforms*
- *Latest Intel 2nd & 3rd Gen. Core i7, NVIDIA GPUs & Tilera Multicore*
- *10GbE, Infiniband & PCIe Switched Fabrics*

- ✓ Single Board Computers
- ✓ Multiprocessors
- ✓ GPGPU
- ✓ I/O Carriers
- ✓ Switch Modules

IPN250/251

SBC624/625

DSP280/281

NPN240/241

PEX442

GBX460

MOSA components with technology roadmap

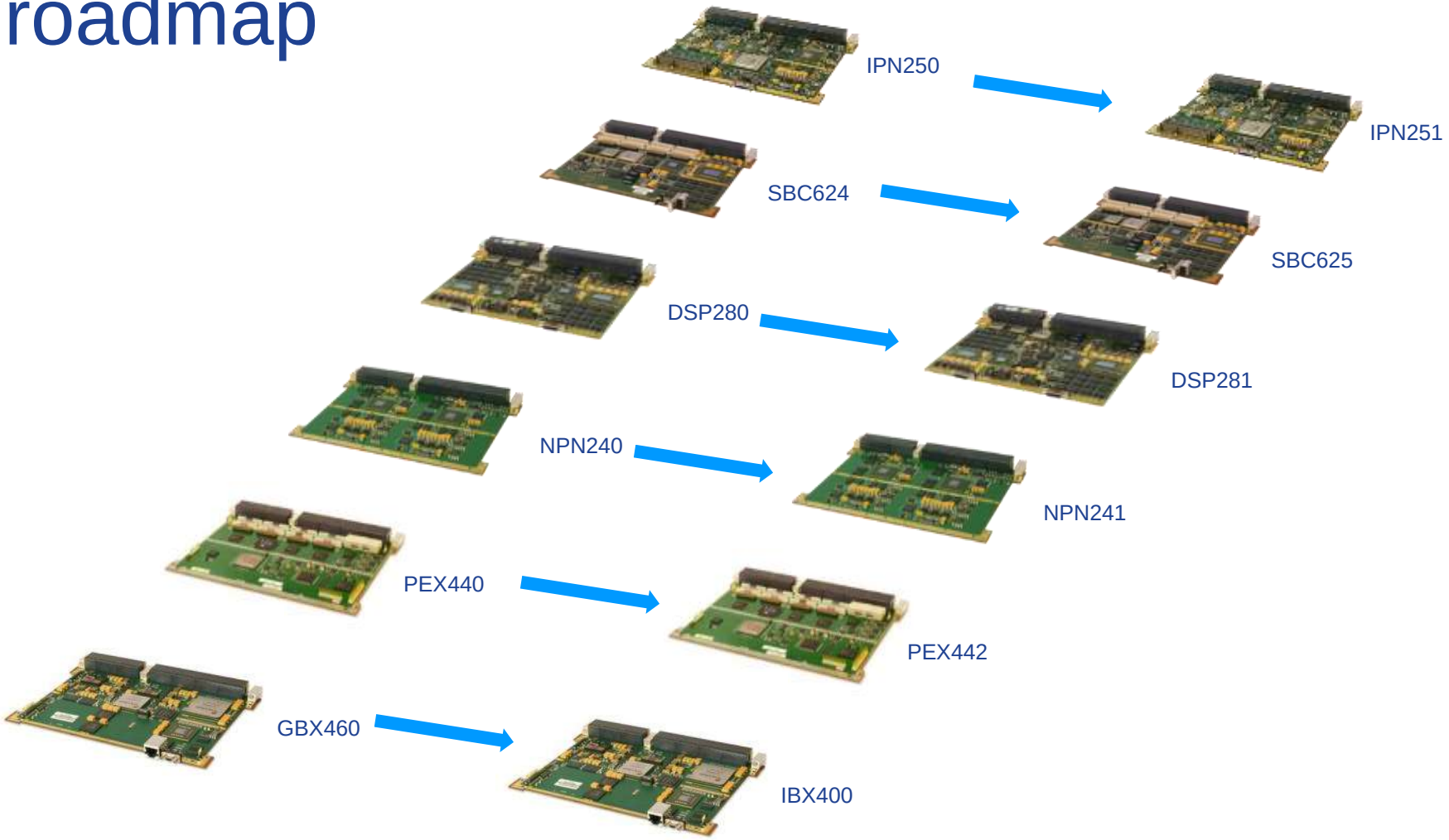

imagination at work

Embedded Compute Clusters

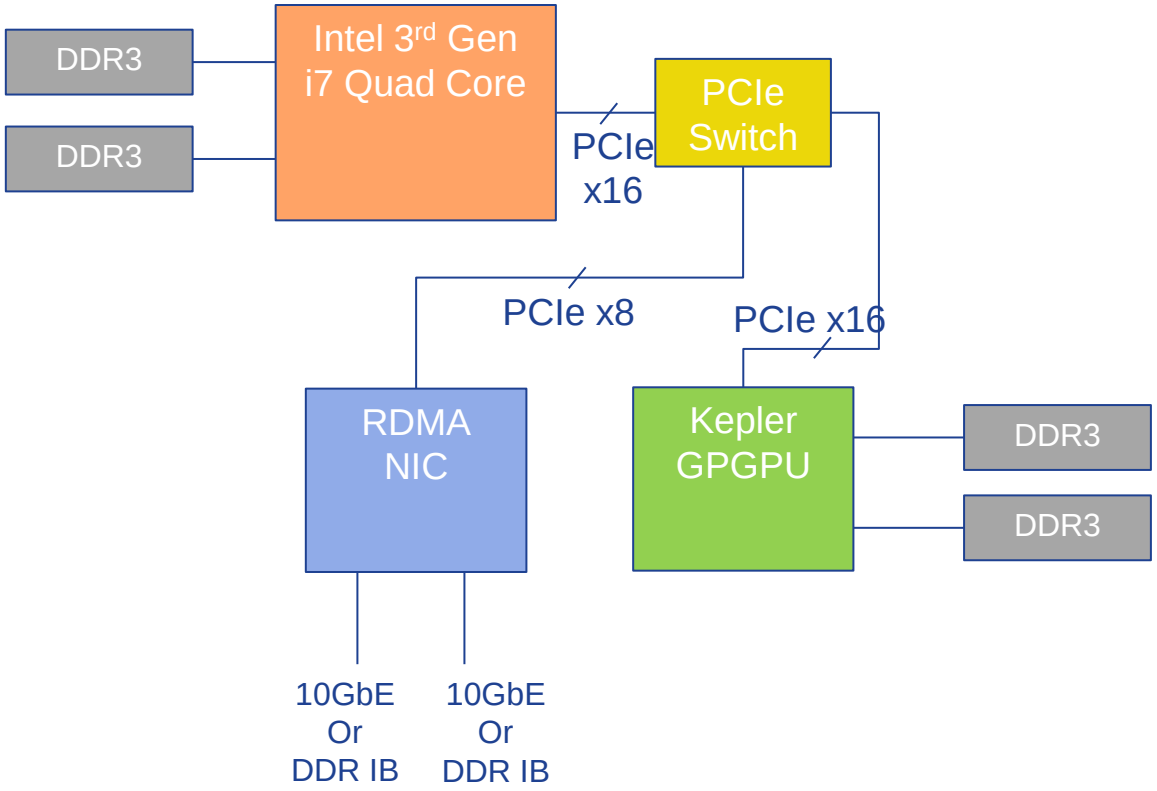

Cooling:

- Air
- Conduction
- Spray
- Air-flowthrough

3rd Gen i7 ~ **150 GFLOPS**

Kepler EXK107 ~ **622 GFLOPS**

OpenVPX enables fabric connections

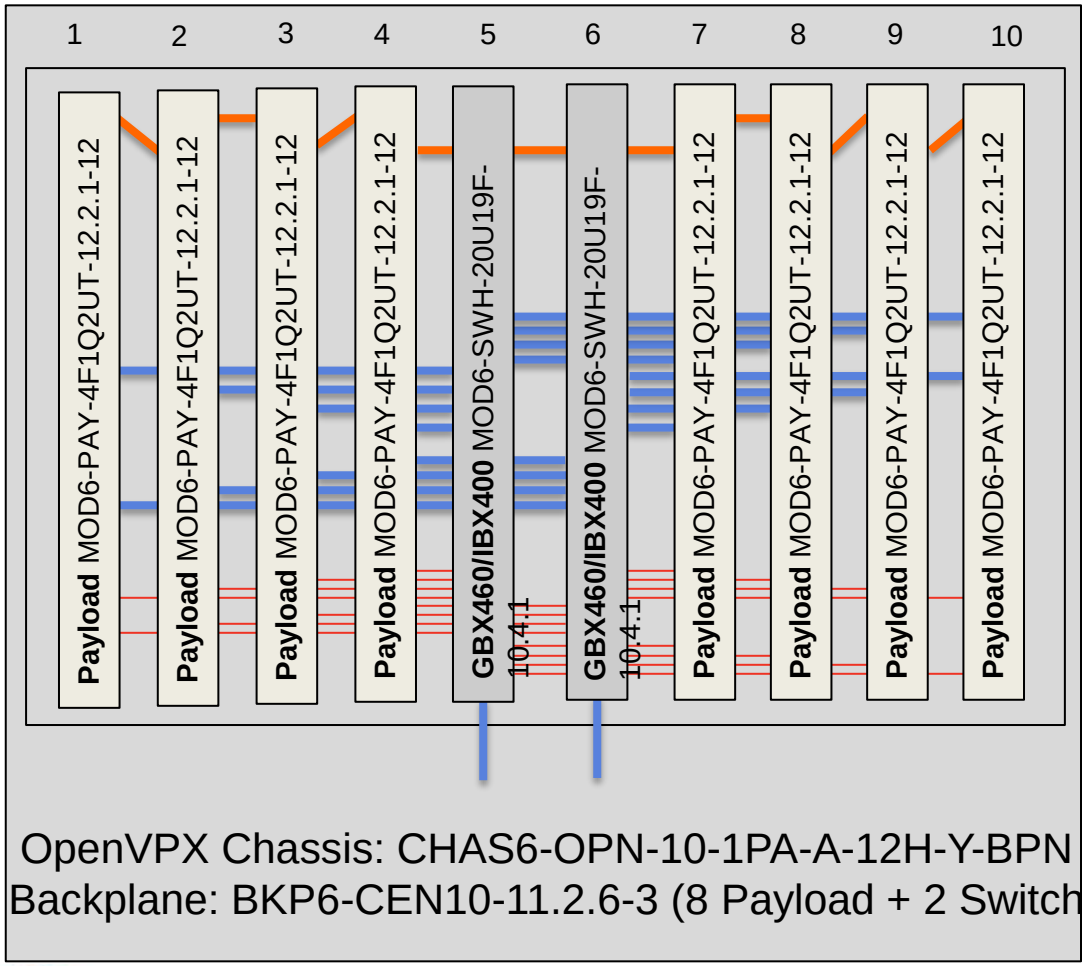

Expansion Plane

- PCIe

Data Plane

- 10GbE, InfiniBand

Control Plane

- 1GbE

imagination at work

AXIS

Advanced Multi-Processor Integrated Software

AXISLIB	AXISFLOW	AXISVIEW
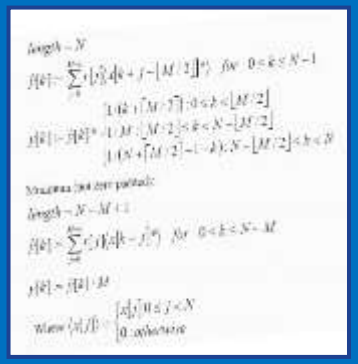	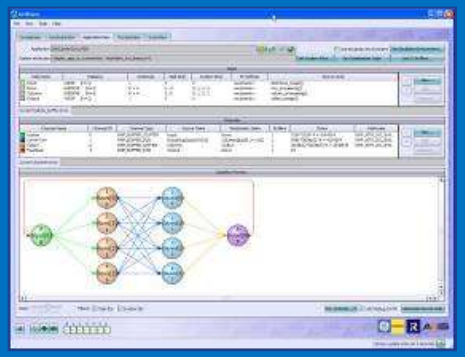	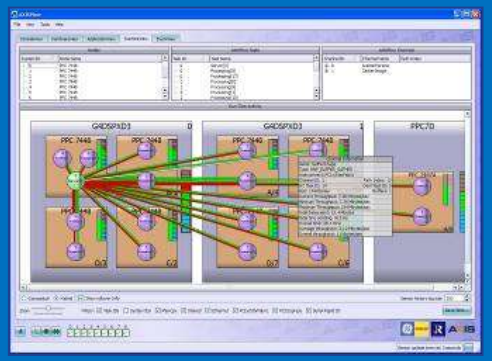
RSPL VSIPL VSIPL++	Dataflow RDMA MPI	Runtime Performance visualization & tuning

imagination at work

Multiple OpenVPX Build Styles

Summary

Bringing technology from supercomputing to rugged MilAero applications

- Intel Processors
- NVIDIA GPGPUs
- InfiniBand and 10G Ethernet interconnects

Open Standards Architectures

- OpenVPX
- Linux
- VSIPL / VSIPL++
- OpenMPI / DDS / CORBA

Dense High Performance Embedded Computing platforms

- Lowest SWaP
- Air, conduction, air-flow through, spray, liquid cooling
- Fully rugged, Fully lifecycle supported

For more information visit: http://defense.ge-ip.com/hpec